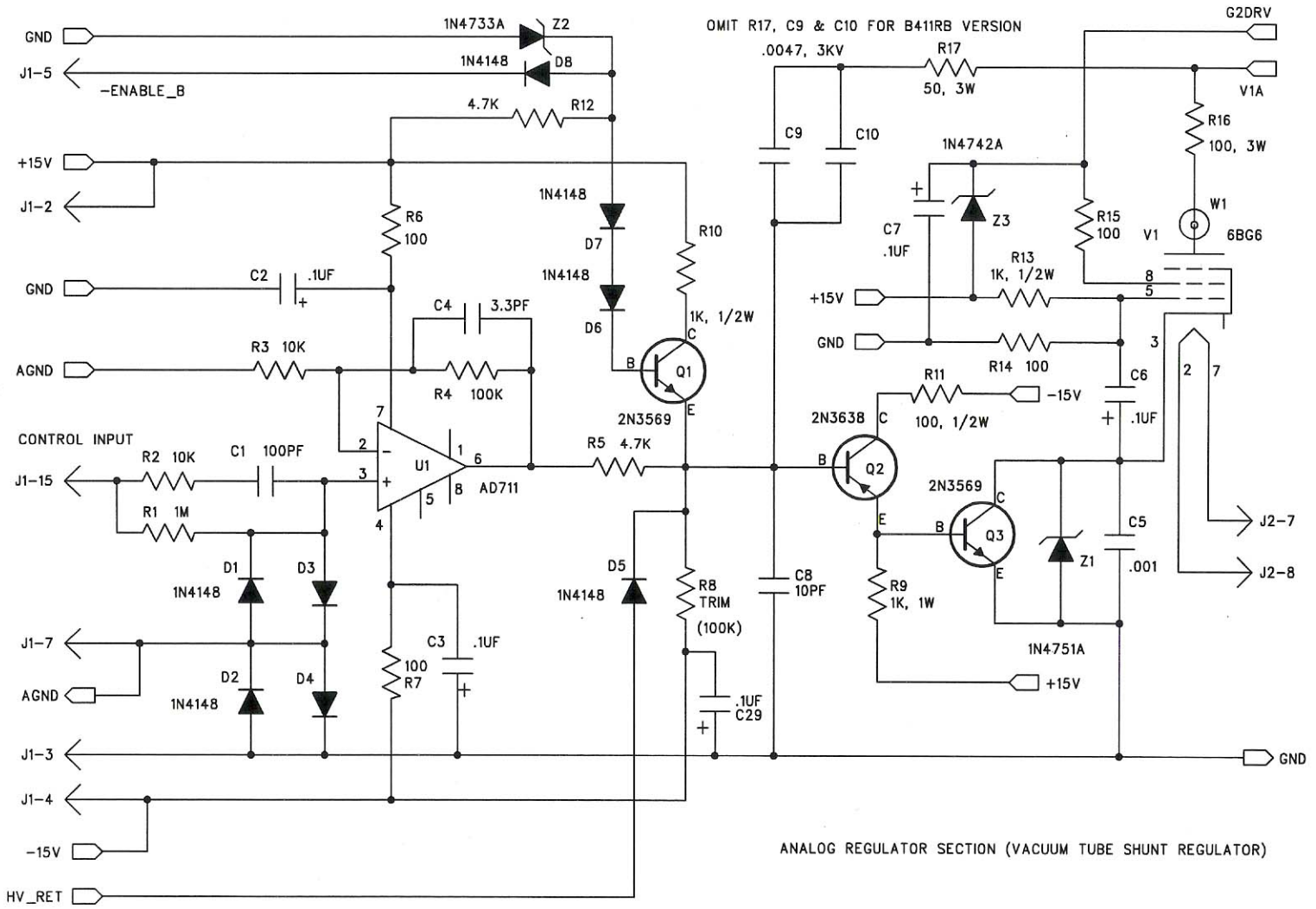

ANALOG REGULATOR SECTION (VACUUM TUBE SHUNT REGULATOR)

TITLE	B411B 2KV TEST SUPPLY				
Dwg# SB411	Rev 1.02	Date 5/24/04	Sheet 1	of 3	FROTHINGHAM ELECTRONICS CORP